All in "mm"

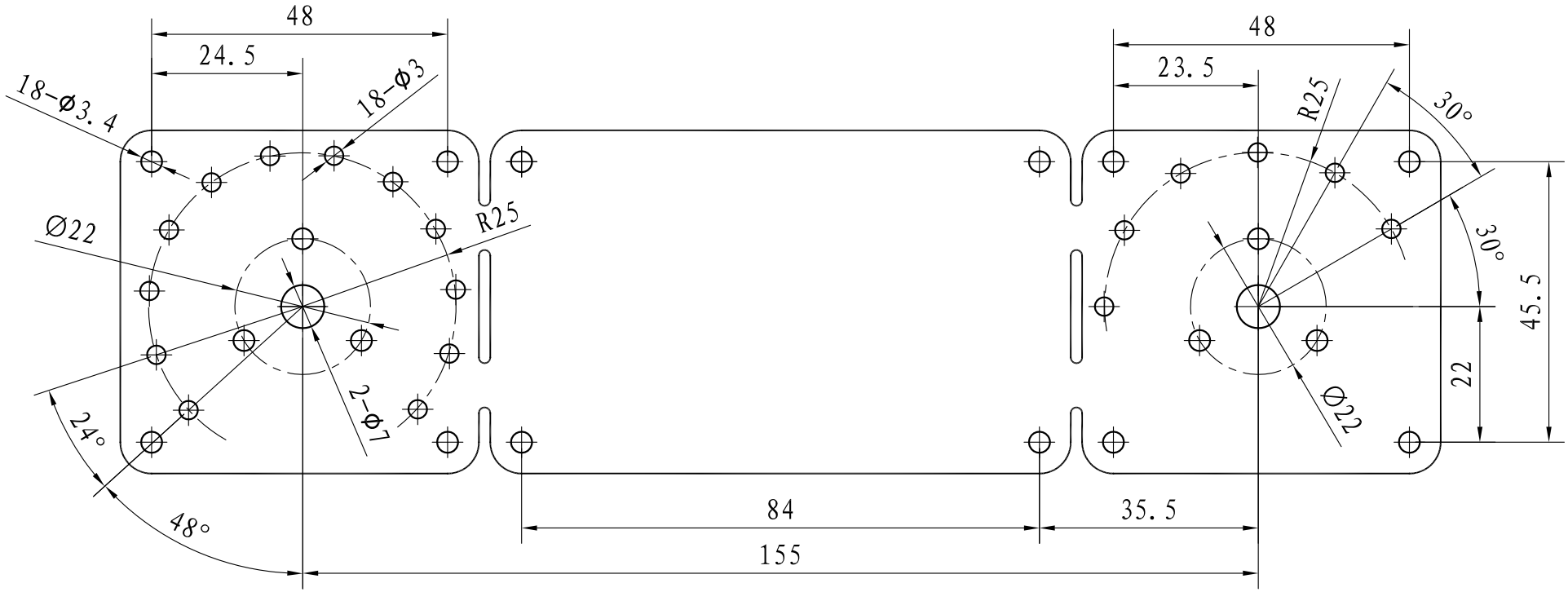

Designed by	Checked by	Approved by - date	Filename	Date	Scale
KW	KW	TL/09-06-09	DRILL TEMPLATE	09 JUN 2009	1:1

DIYHFS	CONTROL MATRIX PCB V2.1 DRILL TEMPLATE		
	DIYHFS 001	Edition 1.0	Sheet 1/1